hansgrohe

Rebris S
Single lever basin mixer 110 with bidette hand shower and shower hose 160 cm without waste set
Surfaces: **Matt Black** Article Number: **72215670**

Description

product features

- consists of: single lever basin mixer, bidette hand shower, shower holder, shower hose
- ComfortZone 110
- projection: 133 mm
- spout height: 109 mm
- spray type: normal spray
- maximum flow rate at 3 bar: 4,7 l/min
- ceramic cartridge
- temperature limitation adjustable
- suitable for continuous flow water heaters
- connection type: G ⅜ connections
- connection dimension: DN15

Technology

AirPower
EcoSmart
Comfort Zone

Design awards

DESIGN AWARD 2022
reddot winner 2022
ICONIC AWARDS 2022 INNOVATIVE ARCHITECTURE winner

Product image

Scale drawing

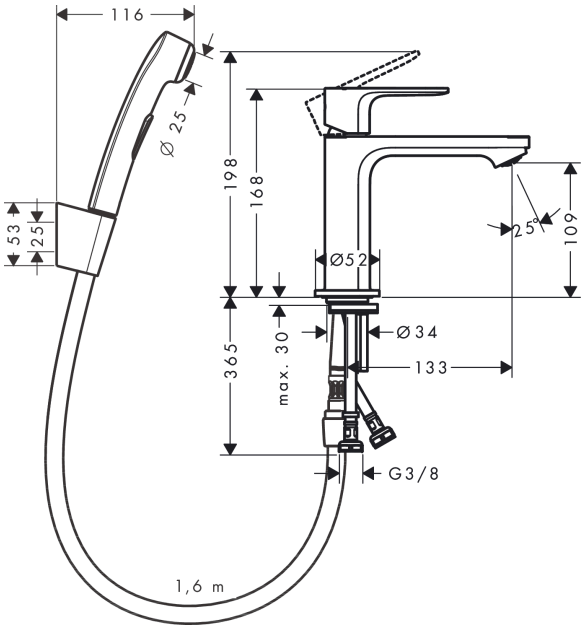

Flowchart

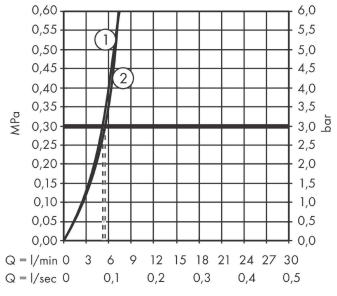

① Rate of flow mixer
② Rate of flow hand shower